CABLE ROUTE CHART
FARRUKHABAD-KASGANJ SECTION

(6 QUAD CABLE)

NORTH EASTERN RAILWAY

SUBMITTED BY:
M/S ASHOK KUMAR SINGH,
MOH.JAGGARNATHPUR
GORAKHPUR

CABLE ROUTE CHART N.E.RAILWAY FARRUKHABAD – KASGANJ SECTION
(6 QUAD CABLE)

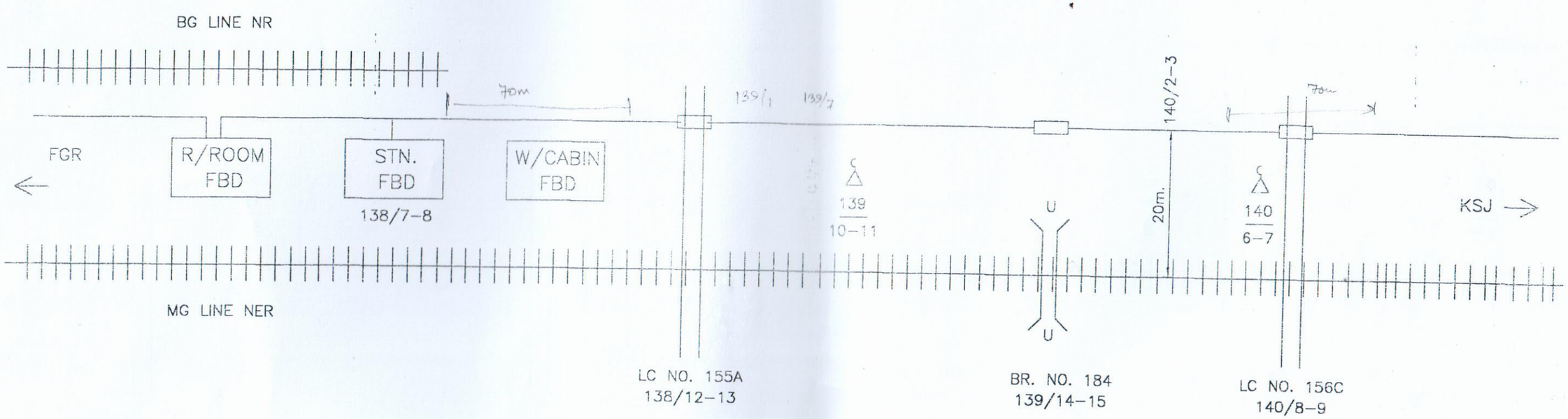

LEGEND ----

1–GI / RCC PIPE----

2–L.C. GATE PHONE---

3–EMERGENCY SOCKET–

4–U – UNDER

5–O – OVER

Not to Scale
All reading in mts

Customer Name		N.E.RAILWAY			
Prepared By :		M/S ASHOK KUMAR SINGH, JAGARNATH PUR, GORAKHPUR			
SHEET NO.	01/23	CREATED BY	AK		Location :--
CREATED ON		OFFERED BY	AK		FARRUKHABAD-KASGANJ
RIMSION NO.		APPR. BY	N.E.RLY		
MODIFIED ON		Ref.no.:- NE/2	DATE		

SE/TELE/CON/LJN DSTE/CON/LJN DY.CSTE/CON/LJN

CABLE ROUTE CHART N.E.RAILWAY FARRUKHABAD – KASGANJ SECTION
(6 QUAD CABLE)

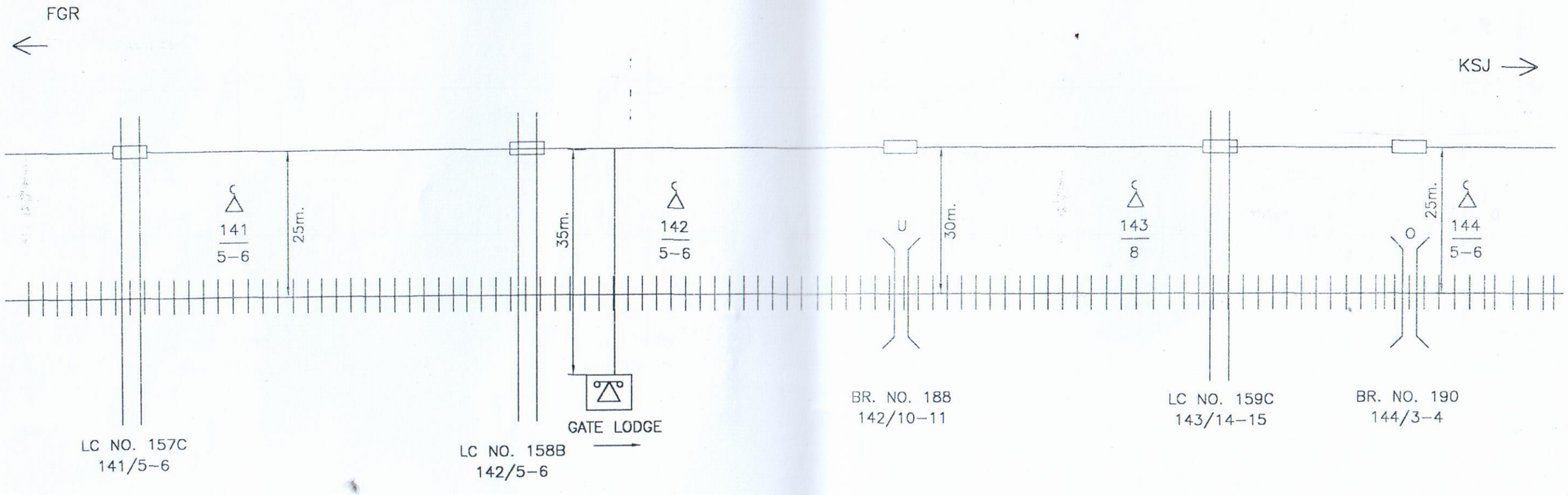

LEGEND ----

1–GI / RCC PIPE----

2–L.C. GATE PHONE---

3–EMERGENCY SOCKET–

4–U – UNDER

5–O – OVER

Not to Scale
All reading in mts

Customer Name		N.E.RAILWAY			
Prepared By :		M/S ASHOK KUMAR SINGH, JAGARNATH PUR, GORAKHPUR			
SHEET NO.	02/23	CREATED BY	AK		Location :– FARRUKHABAD-KASGANJ
CREATED ON		OFFERED BY	AK		
RIVISION NO.		APPR. BY	N.E.RLY		
MODIFIED ON		Ref.no.:– NE/2	DATE		

SE/TELE/CON/LJN DSTE/CON/LJN DY.CSTE/CON/LJN

CABLE ROUTE CHART N.E.RAILWAY FARRUKHABAD – KASGANJ SECTION
(6 QUAD CABLE)

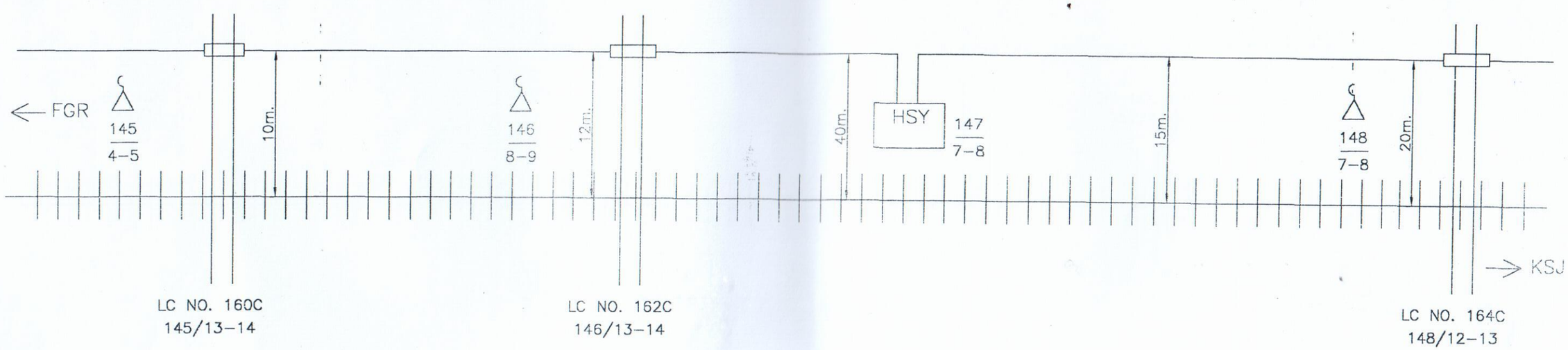

LEGEND ----

1–GI / RCC PIPE----

2–L.C. GATE PHONE---

3–EMERGENCY SOCKET–

4–U – UNDER

5–O – OVER

SE/TELE/CON/LJN DSTE/CON/LJN DY.CSTE/CON/LJN

Not to Scale

All reading in mts

Customer Name		N.E.RAILWAY			
Prepared By :		M/S ASHOK KUMAR SINGH, JAGARNATH PUR, GORAKHPUR			
SHEET NO.	03/23	CREATED BY	AK		Location :-- FARRUKHABAD-KASGANJ
CREATED ON		OFFERED BY	AK		
RIVISION NO.		APPR. BY	N.E.RLY		
MODIFIED ON		Ref.no.:- NE/2 DATE			

CABLE ROUTE CHART N.E.RAILWAY FARRUKHABAD – KASGANJ SECTION
(6 QUAD CABLE)

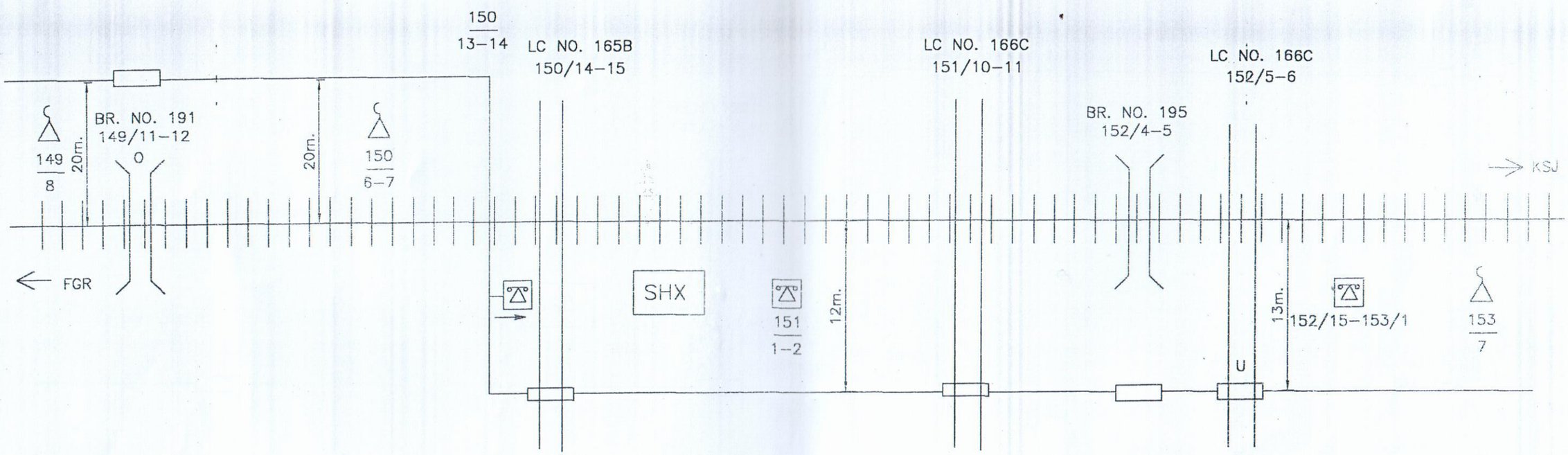

LEGEND ----

1–GI / RCC PIPE----

2–L.C. GATE PHONE---

3–EMERGENCY SOCKET–

4–U – UNDER

5–O – OVER

Not to Scale
All reading in mts

Customer Name		N.E.RAILWAY			
Prepared By :		M/S ASHOK KUMAR SINGH, JAGARNATH PUR, GORAKHPUR			
SHEET NO.	04/23	CREATED BY	AK		Location :-- FARRUKHABAD-KASGANJ
CREATED ON		OFFERED BY	AK		
RIVISION NO.		APPR. BY	N.E.RLY		
MODIFIED ON		Ref.no.:– NE/2 DATE			

SE/TELE/CON/LJN DSTE/CON/LJN DY.CSTE/CON/LJN

CABLE ROUTE CHART N.E.RAILWAY FARRUKHABAD – KASGANJ SECTION
(6 QUAD CABLE)

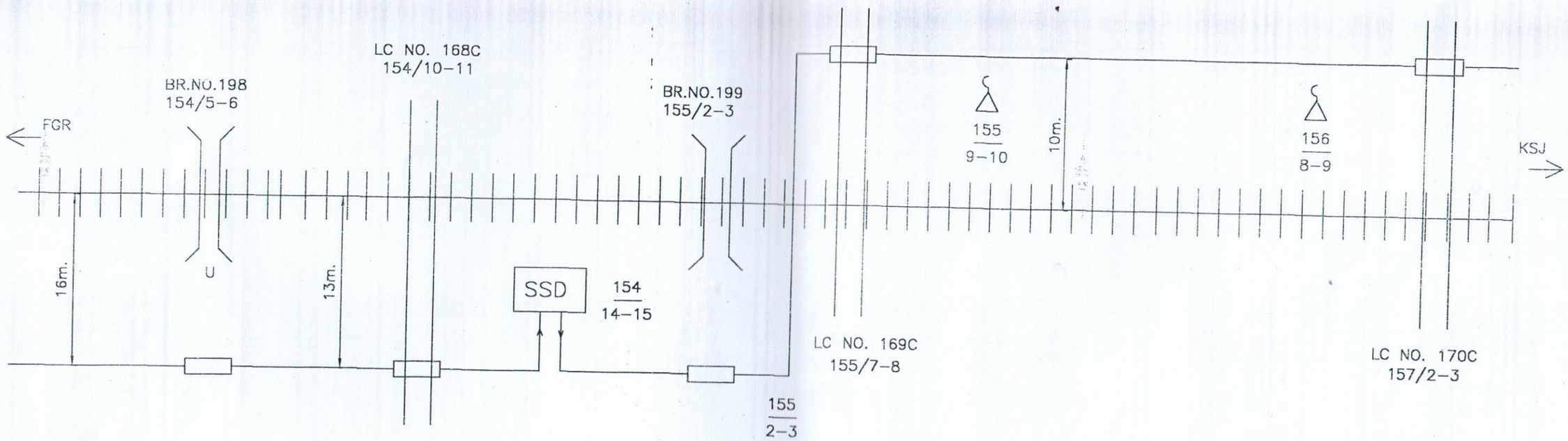

LEGEND---

1–GI / RCC PIPE----

2–L.C. GATE PHONE---

3–EMERGENCY SOCKET–

4–U – UNDER

5–O – OVER

Not to Scale
All reading in mts

SE/TELE/CON/LJN DSTE/CON/LJN DY.CSTE/CON/LJN

Customer Name		N.E.RAILWAY			
Prepared By :		M/S ASHOK KUMAR SINGH, JAGARNATH PUR, GORAKHPUR			
SHEET NO.	05/23	CREATED BY	AK		Location :-- FARRUKHABAD-KASGANJ
CREATED ON		OFFERED BY	AK		
RIVISION NO.		APPR. BY	N.E.RLY		
MODIFIED ON		Ref.no.:- NE/2	DATE		

CABLE ROUTE CHART N.E.RAILWAY FARRUKHABAD – KASGANJ SECTION
(6 QUAD CABLE)

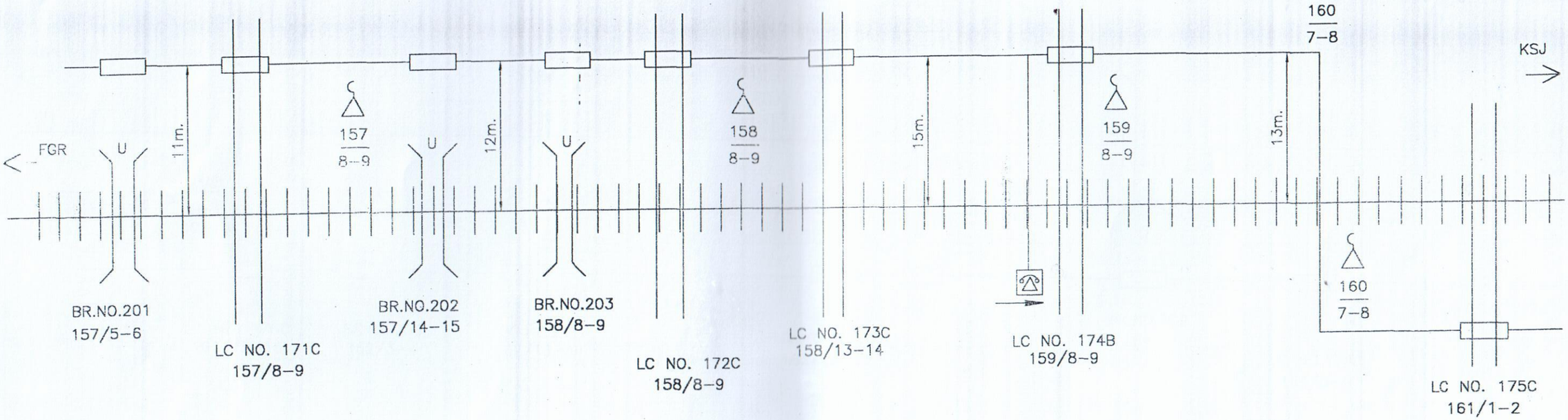

LEGEND---

1–GI / RCC PIPE----

2–L.C. GATE PHONE---

3–EMERGENCY SOCKET–

4–U – UNDER

5–O – OVER

Not to Scale
All reading in mts

Customer Name		N.E.RAILWAY			
Prepared By :		M/S ASHOK KUMAR SINGH, JAGARNATH PUR, GORAKHPUR			
SHEET NO.	06/23	CREATED BY	AK		Location :-- FARRUKHABAD-KASGANJ
CREATED ON		OFFERED BY	AK		
RIVISION NO.		APPR. BY	N.E.RLY		
MODIFIED ON		Ref.no.:- NE/2	DATE		

SE/TELE/CON/LJN DSTE/CON/LJN DY.CSTE/CON/LJN

CABLE ROUTE CHART N.E.RAILWAY FARRUKHABAD – KASGANJ SECTION
(6 QUAD CABLE)

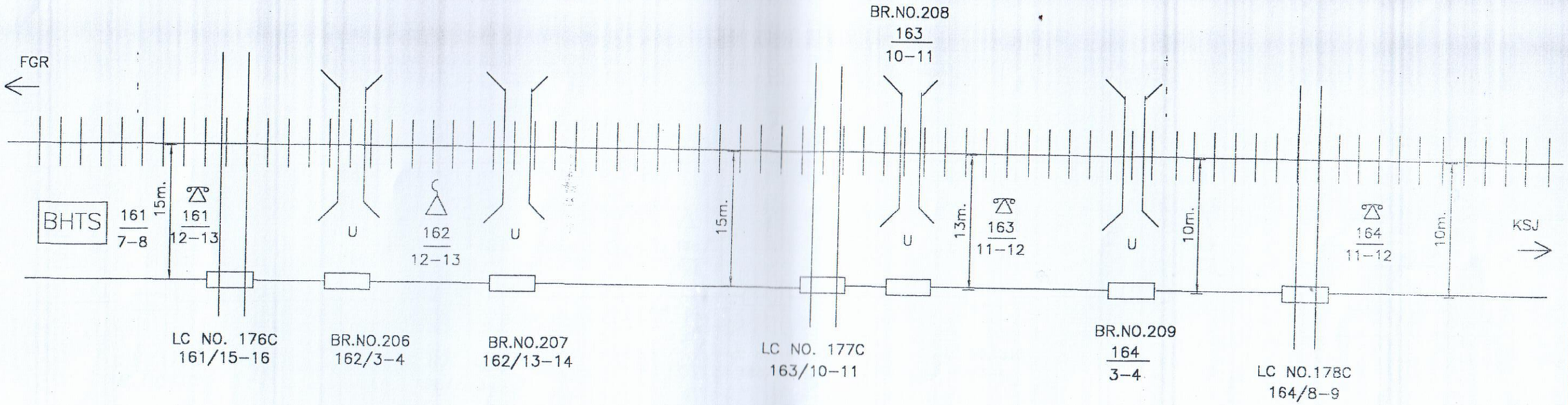

LEGEND---

1–GI / RCC PIPE----

2–L.C. GATE PHONE---

3–EMERGENCY SOCKET–

4–U – UNDER

5–O – OVER

Not to Scale
All reading in mts

SE/TELE/CON/LJN DSTE/CON/LJN DY.CSTE/CON/LJN

Customer Name		N.E.RAILWAY			
Prepared By :		M/S ASHOK KUMAR SINGH, JAGARNATH PUR, GORAKHPUR			
SHEET NO.	07/23	CREATED BY	AK		Location :-- FARRUKHABAD-KASGANJ
CREATED ON		OFFERED BY	AK		
RIVISION NO.		APPR. BY	N.E.RLY		
MODIFIED ON		Ref.no.:– NE/2 DATE			

CABLE ROUTE CHART N.E.RAILWAY FARRUKHABAD – KASGANJ SECTION
(6 QUAD CABLE)

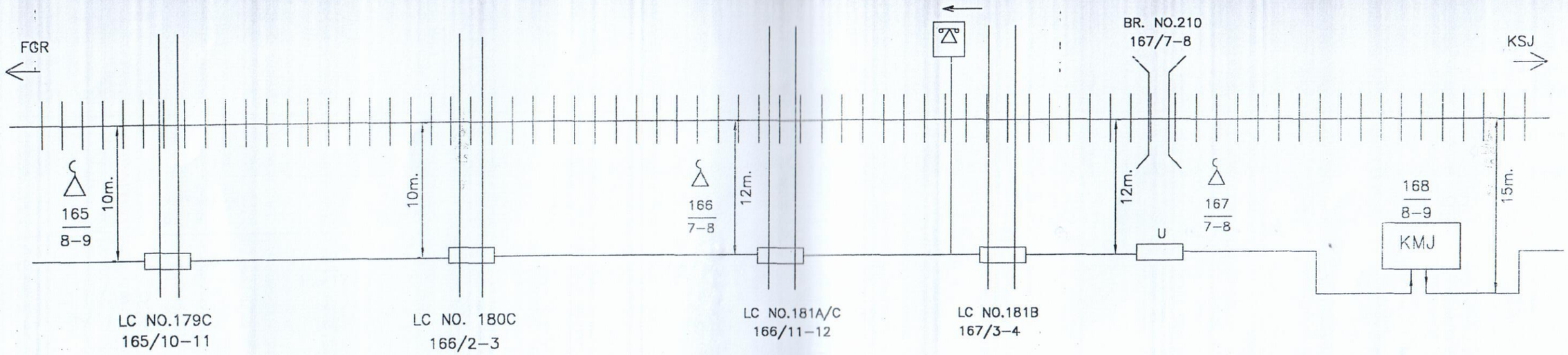

LEGEND ----

1–GI / RCC PIPE----

2–L.C. GATE PHONE---

3–EMERGENCY SOCKET–

4–U – UNDER

5–O – OVER

Not to Scale
All reading in mts

Customer Name		N.E.RAILWAY			
Prepared By :		M/S ASHOK KUMAR SINGH, JAGARNATH PUR, GORAKHPUR			
SHEET NO.	08/23	CREATED BY	AK		Location :--
CREATED ON		OFFERED BY	AK		FARRUKHABAD-KASGANJ
RIVISION NO.		APPR. BY	N.E.RLY		
MODIFIED ON		Ref.no.:– NE/2 DATE			

SE/TELE/CON/LJN DSTE/CON/LJN DY.CSTE/CON/LJN

CABLE ROUTE CHART N.E.RAILWAY FARRUKHABAD – KASGANJ SECTION
(6 QUAD CABLE)

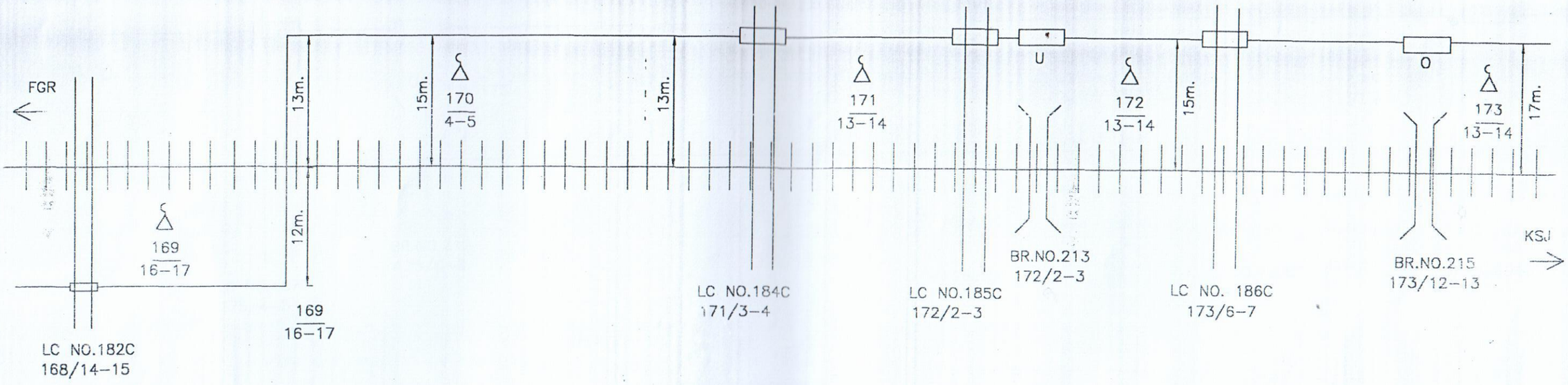

LEGEND --

1–GI / RCC PIPE----

2–L.C. GATE PHONE---

3–EMERGENCY SOCKET–

4–U – UNDER

5–O – OVER

Not to Scale
All reading in mts

SE/TELE/CON/LJN DSTE/CON/LJN DY.CSTE/CON/LJN

Customer Name		N.E.RAILWAY			
Prepared By :		M/S ASHOK KUMAR SINGH, JAGARNATH PUR, GORAKHPUR			
SHEET NO.	09/23	CREATED BY	AK		Location :-- FARRUKHABAD-KASGANJ
CREATED ON		OFFERED BY	AK		
RIVISION NO.		APPR. BY	N.E.RLY		
MODIFIED ON		Ref.no.:– NE/2 DATE			

CABLE ROUTE CHART N.E.RAILWAY FARRUKHABAD – KASGANJ SECTION
(6 QUAD CABLE)

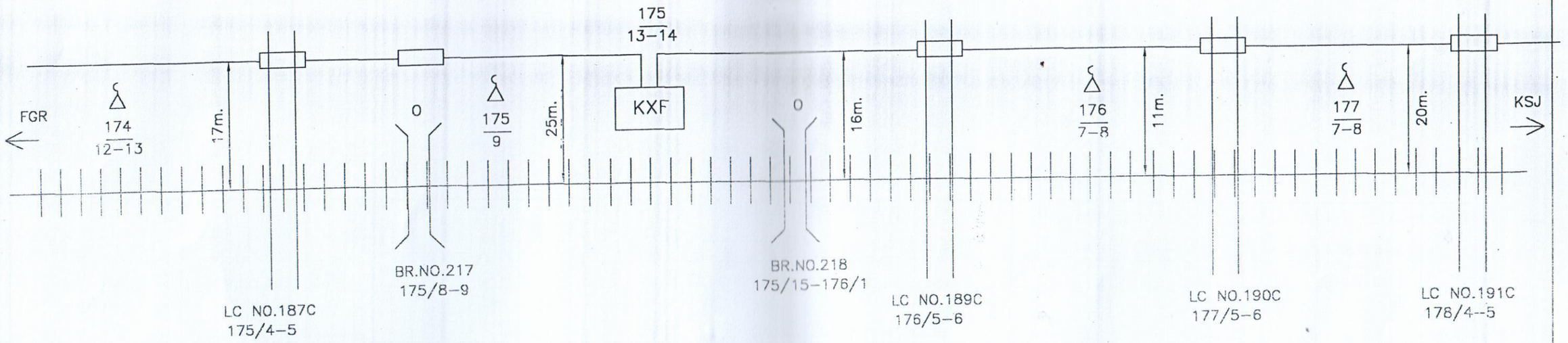

LEGEND --

1–GI / RCC PIPE----

2–L.C. GATE PHONE---

3–EMERGENCY SOCKET–

4–U – UNDER

5–O – OVER

Not to Scale

All reading in mts

Customer Name		N.E.RAILWAY			
Prepared By :		M/S ASHOK KUMAR SINGH, JAGARNATH PUR, GORAKHPUR			
SHEET NO.	10/23	CREATED BY	AK		Location :-- FARRUKHABAD-KASGANJ
CREATED ON		OFFERED BY	AK		
RIVISION NO.		APPR. BY	N.E.RLY		
MODIFIED ON		Ref.no.:– NE/2	DATE		

SE/TELE/CON/LJN DSTE/CON/LJN DY.CSTE/CON/LJN

CABLE ROUTE CHART N.E.RAILWAY FARRUKHABAD – KASGANJ SECTION
(6 QUAD CABLE)

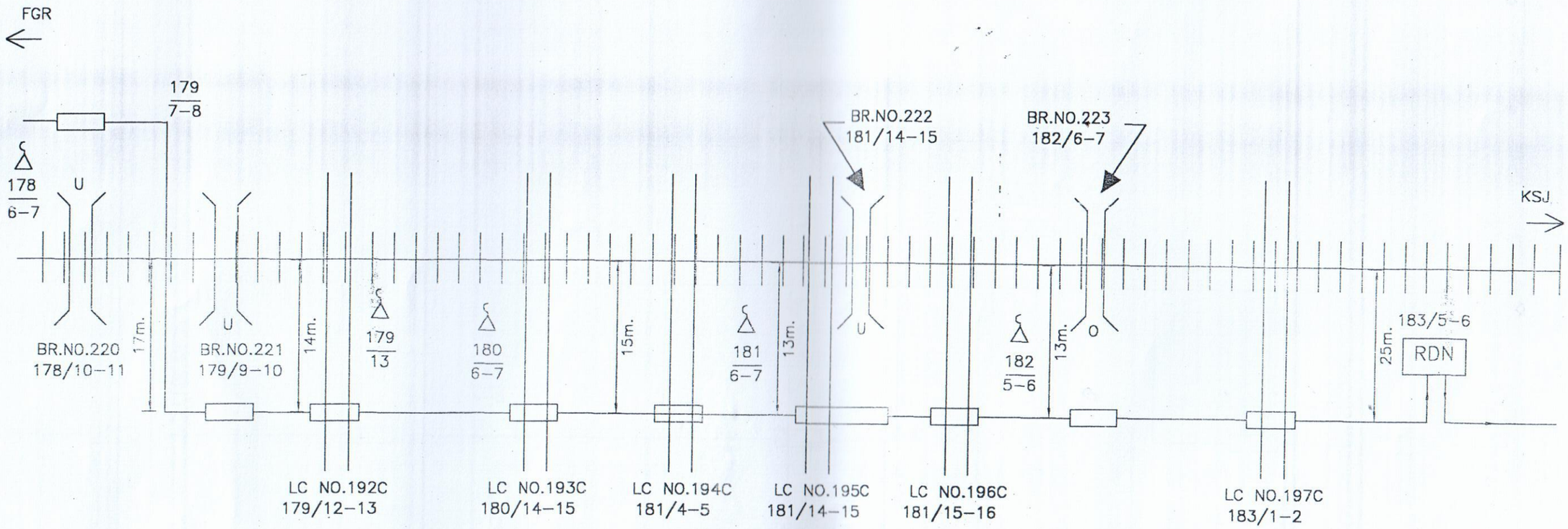

LEGEND --

1–GI / RCC PIPE----

2–L.C. GATE PHONE---

3–EMERGENCY SOCKET–

4–U – UNDER

5–O – OVER

Not to Scale

All reading in mts

SE/TELE/CON/LJN DSTE/CON/LJN DY.CSTE/CON/LJN

Customer Name		N.E.RAILWAY			
Prepared By :		M/S ASHOK KUMAR SINGH, JAGARNATH PUR, GORAKHPUR			
SHEET NO.	11/23	CREATED BY	AK		Location :--
CREATED ON		OFFERED BY	AK		FARRUKHABAD-KASGANJ
RIVISION NO.		APPR. BY	N.E.RLY		
MODIFIED ON		Ref.no.:– NE/2	DATE		

CABLE ROUTE CHART N.E.RAILWAY FARRUKHABAD – KASGANJ SECTION
(6 QUAD CABLE)

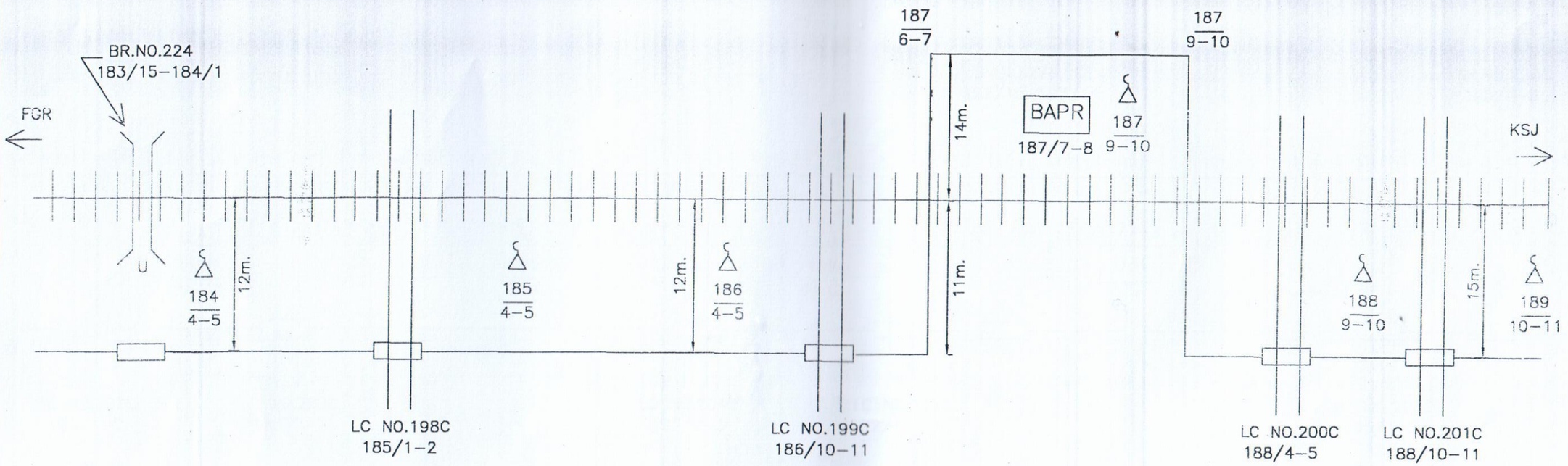

LEGEND --

1–GI / RCC PIPE----

2–L.C. GATE PHONE---

3–EMERGENCY SOCKET–

4–U – UNDER

5–O – OVER

Not to Scale

All reading in mts

SE/TELE/CON/LJN DSTE/CON/LJN DY.CSTE/CON/LJN

Customer Name		N.E.RAILWAY			
Prepared By :		M/S ASHOK KUMAR SINGH, JAGARNATH PUR, GORAKHPUR			
SHEET NO.	12/23	CREATED BY	AK		Location :-- FARRUKHABAD-KASGANJ
CREATED ON		OFFERED BY	AK		
RIVISION NO.		APPR. BY	N.E.RLY		
MODIFIED ON		Ref.no.:- NE/2 DATE			

CABLE ROUTE CHART N.E.RAILWAY FARRUKHABAD – KASGANJ SECTION
(6 QUAD CABLE)

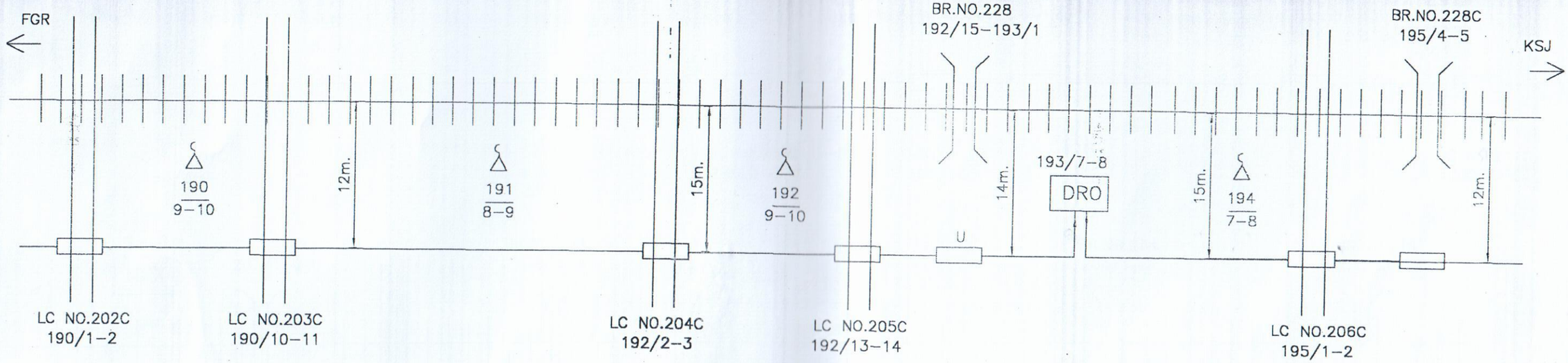

LEGEND --

1–GI / RCC PIPE----

2–L.C. GATE PHONE---

3–EMERGENCY SOCKET–

4–U – UNDER

5–O – OVER

Not to Scale

All reading in mts

Customer Name		N.E.RAILWAY			
Prepared By :		M/S ASHOK KUMAR SINGH, JAGARNATH PUR, GORAKHPUR			
SHEET NO.	13/23	CREATED BY	AK		Location :-- FARRUKHABAD-KASGANJ
CREATED ON		OFFERED BY	AK		
RIVISION NO.		APPR. BY	N.E.RLY		
MODIFIED ON		Ref.no.:– NE/2	DATE		

SE/TELE/CON/LJN DSTE/CON/LJN DY.CSTE/CON/LJN

CABLE ROUTE CHART N.E.RAILWAY FARRUKHABAD – KASGANJ SECTION
(6 QUAD CABLE)

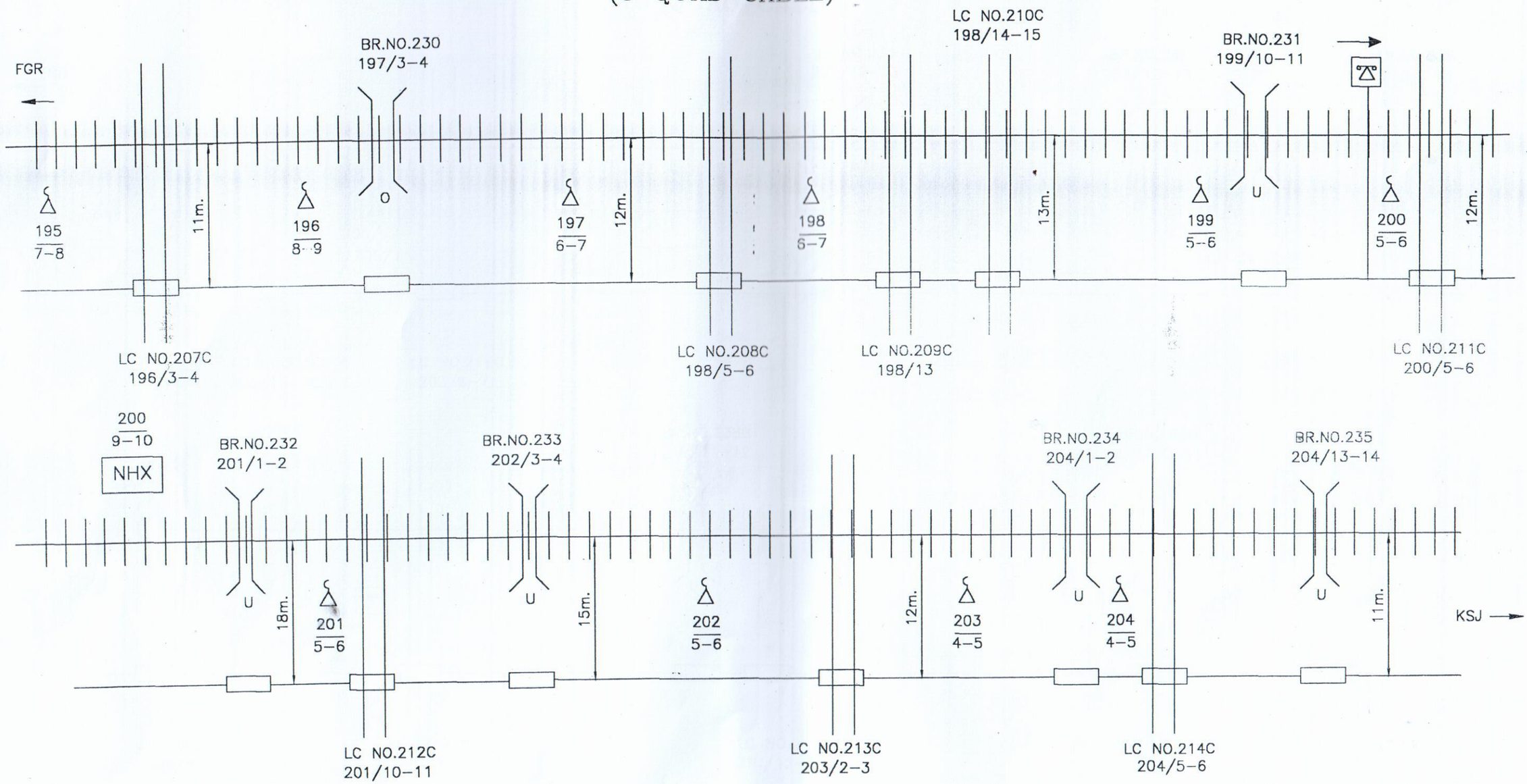

Not to Scale
All reading in mts

LEGEND --
1–GI / RCC PIPE----
2–L.C. GATE PHONE---
3–EMERGENCY SOCKET–
4–U – UNDER
5–O – OVER

SE/TELE/CON/LJN DSTE/CON/LJN DY.CSTE/CON/LJN

Customer Name		N.E.RAILWAY			
Prepared By :		M/S ASHOK KUMAR SINGH, JAGARNATH PUR, GORAKHPUR			
SHEET NO.	14/23	CREATED BY	AK		Location :-- FARRUKHABAD-KASGANJ
CREATED ON		OFFERED BY	AK		
RIVISION NO.		APPR. BY	N.E.RLY		
MODIFIED ON		Ref.no.:– NE/2	DATE		

CABLE ROUTE CHART N.E.RAILWAY FARRUKHABAD – KASGANJ SECTION
(6 QUAD CABLE)

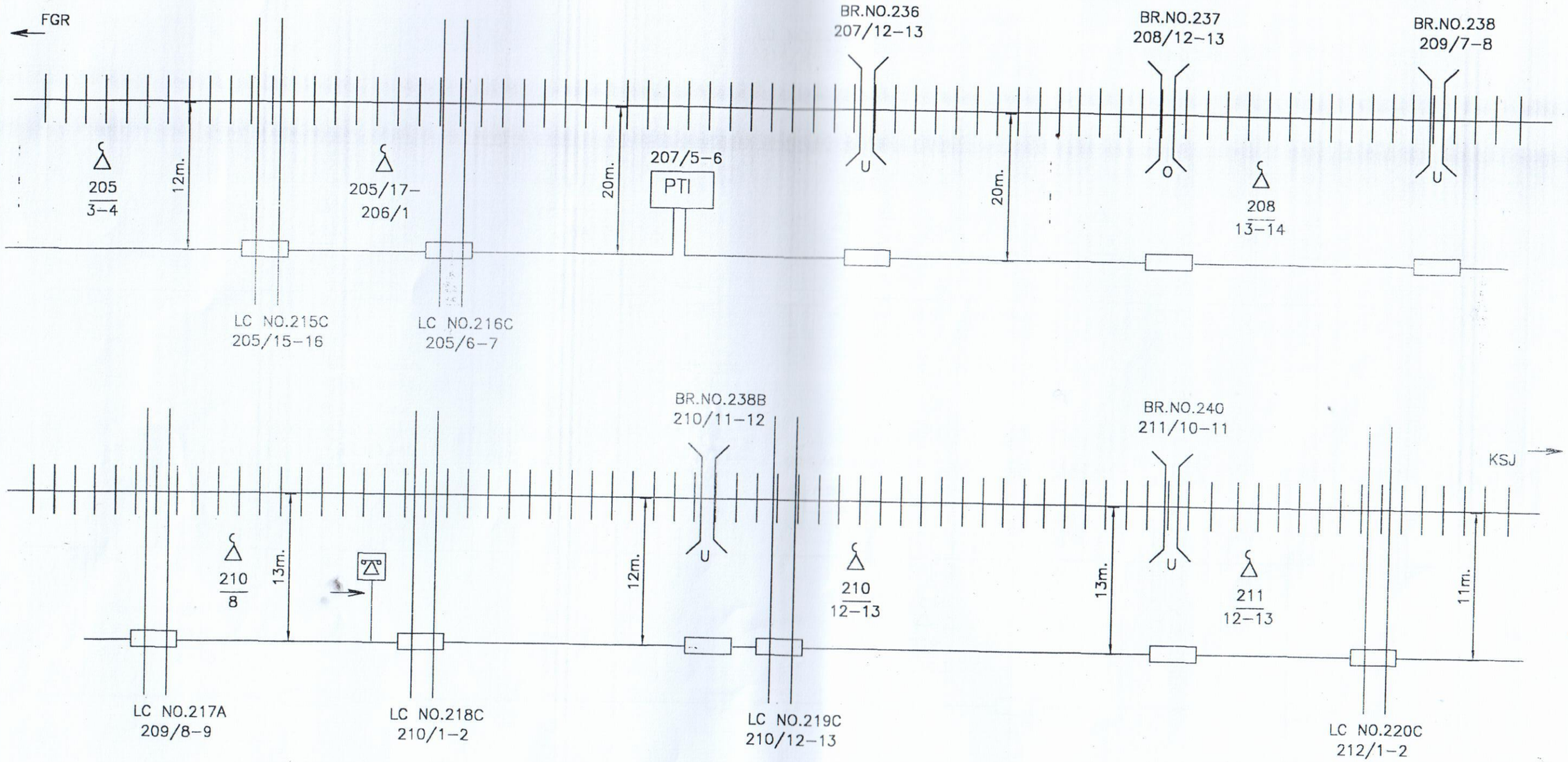

LEGEND --

1–GI / RCC PIPE----
2–L.C. GATE PHONE---
3–EMERGENCY SOCKET–
4–U – UNDER
5–O – OVER

Not to Scale
All reading in mts

SE/TELE/CON/LJN DSTE/CON/LJN DY.CSTE/CON/LJN

Customer Name		N.E.RAILWAY			
Prepared By :		M/S ASHOK KUMAR SINGH, JAGARNATH PUR, GORAKHPUR			
SHEET NO.	15/23	CREATED BY	AK		Location :-- FARRUKHABAD-KASGANJ
CREATED ON		OFFERED BY	AK		
RIVISION NO.		APPR. BY	N.E.RLY		
MODIFIED ON		Ref.no.:– NE/2 DATE			

CABLE ROUTE CHART N.E.RAILWAY FARRUKHABAD – KASGANJ SECTION
(6 QUAD CABLE)

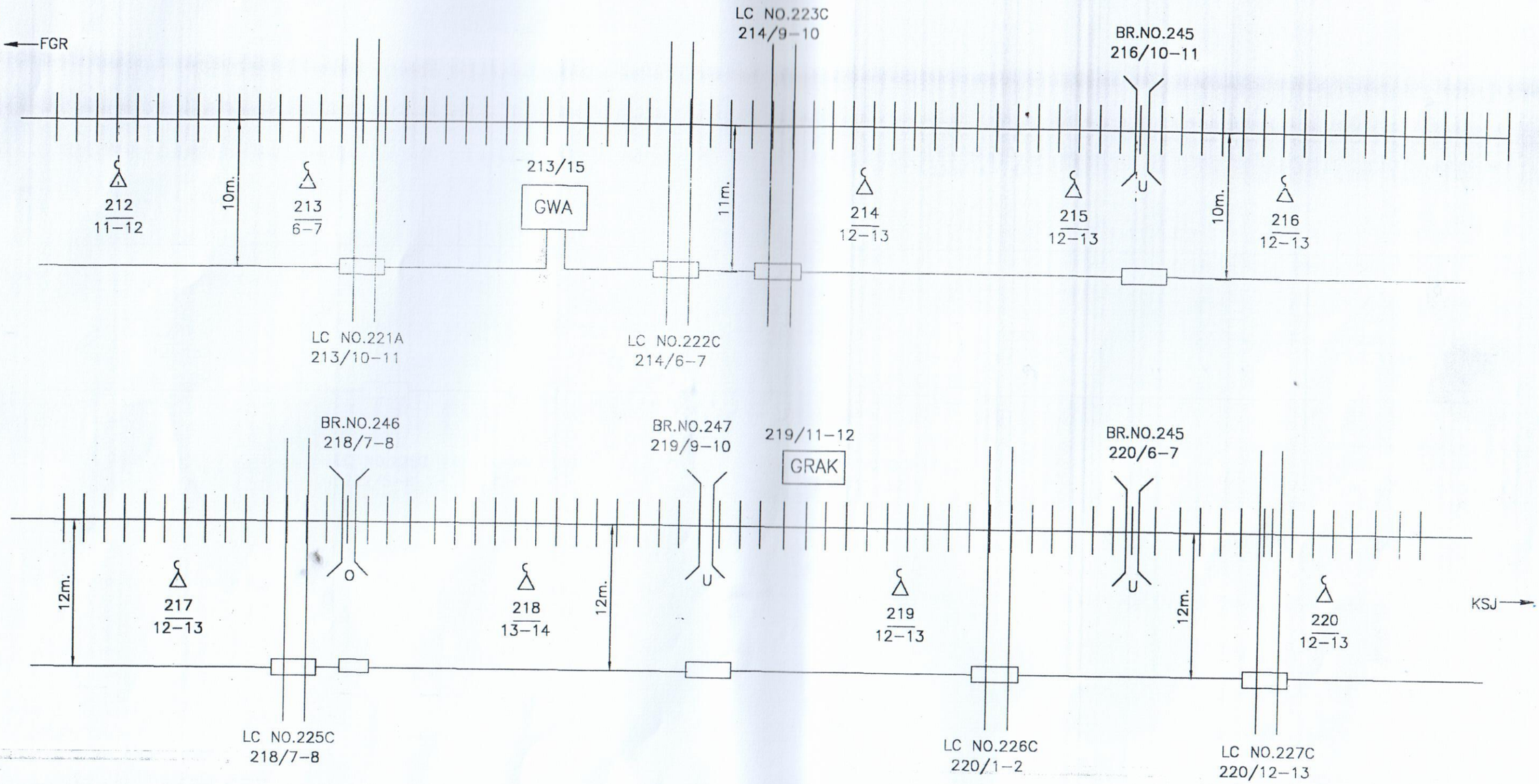

LEGEND --
1–GI / RCC PIPE----
2–L.C. GATE PHONE---
3–EMERGENCY SOCKET–
4–U – UNDER
5–O – OVER

Not to Scale
All reading in mts

Customer Name		N.E.RAILWAY			
Prepared By :		M/S ASHOK KUMAR SINGH, JAGARNATH PUR, GORAKHPUR			
SHEET NO.	16/23	CREATED BY	AK		Location :-- FARRUKHABAD-KASGANJ
CREATED ON		OFFERED BY	AK		
RIVISION NO.		APPR. BY	N.E.RLY		
MODIFIED ON		Ref.no.:– NE/2	DATE		

SE/TELE/CON/LJN DSTE/CON/LJN DY.CSTE/CON/LJN

CABLE ROUTE CHART N.E.RAILWAY FARRUKHABAD – KASGANJ SECTION
(6 QUAD CABLE)

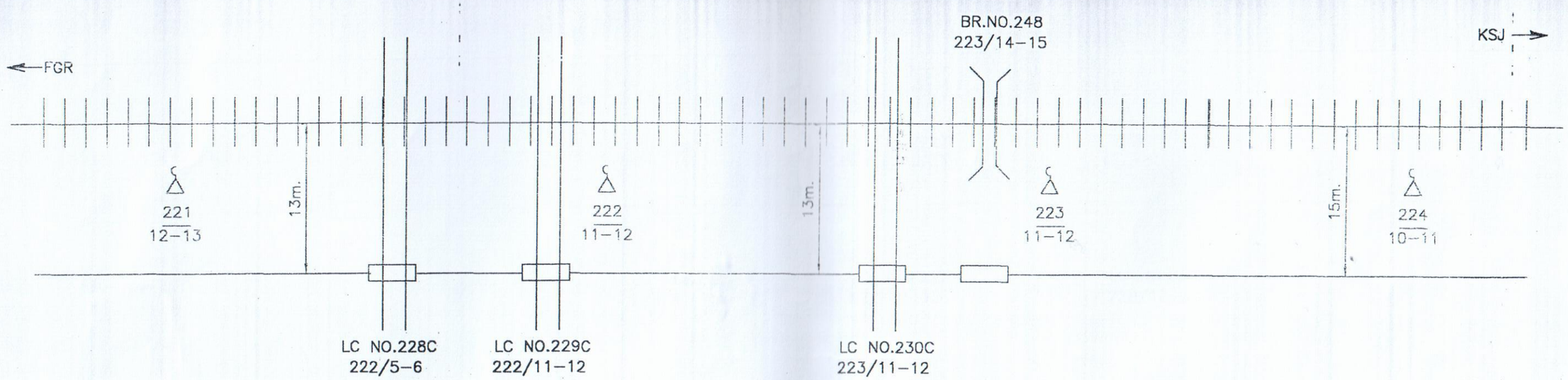

LEGEND --

1–GI / RCC PIPE----

2–L.C. GATE PHONE---

3–EMERGENCY SOCKET–

4–U – UNDER

5–O – OVER

Not to Scale

All reading in mts

Customer Name		N.E.RAILWAY			
Prepared By :		M/S ASHOK KUMAR SINGH, JAGARNATH PUR, GORAKHPUR			
SHEET NO.	17/23	CREATED BY	AK		Location :--
CREATED ON		OFFERED BY	AK		FARRUKHABAD-KASGANJ
RIVISION NO.		APPR. BY	N.E.RLY		
MODIFIED ON		Ref.no.:– NE/2 DATE			

SE/TELE/CON/LJN DSTE/CON/LJN DY.CSTE/CON/LJN

CABLE ROUTE CHART N.E.RAILWAY FARRUKHABAD – KASGANJ SECTION
(6 QUAD CABLE)

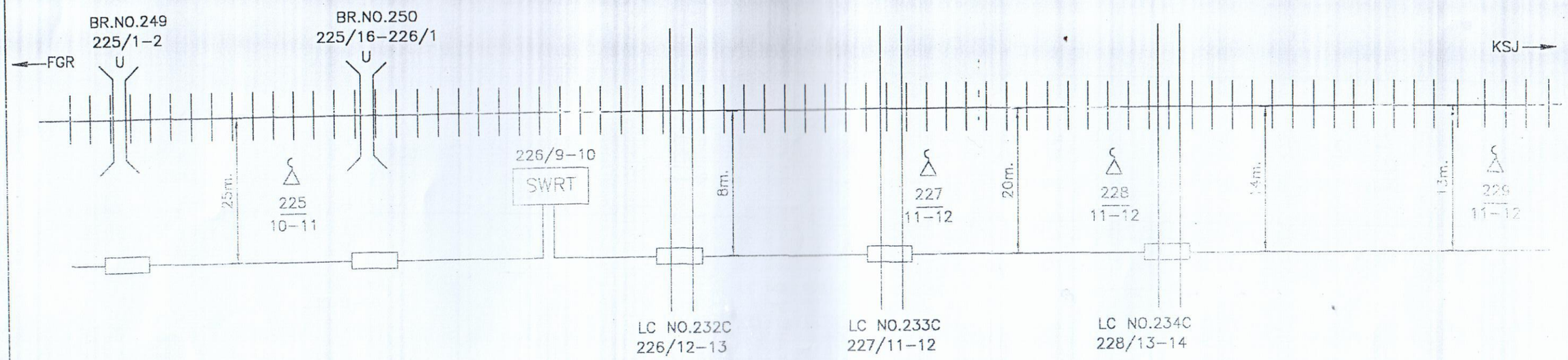

LEGEND --

1-GI / RCC PIPE----

2-L.C. GATE PHONE---

3-EMERGENCY SOCKET--

4-U – UNDER

5-O – OVER

Not to Scale

All reading in mts

Customer Name		N.E.RAILWAY			
Prepared By :		M/S ASHOK KUMAR SINGH, JAGARNATH PUR, GORAKHPUR			
SHEET NO.	18/23	CREATED BY	AK		Location :---
CREATED ON		OFFERED BY	AK		FARRUKHABAD-KASGANJ
RIVISION NO.		APPR. BY	N.E.RLY		
MODIFIED ON		Ref.no.:- NE/2	DATE		

SE/TELE/CON/LJN DSTE/CON/LJN DY.CSTE/CON/LJN

CABLE ROUTE CHART N.E.RAILWAY FARRUKHABAD – KASGANJ SECTION
(6 QUAD CABLE)

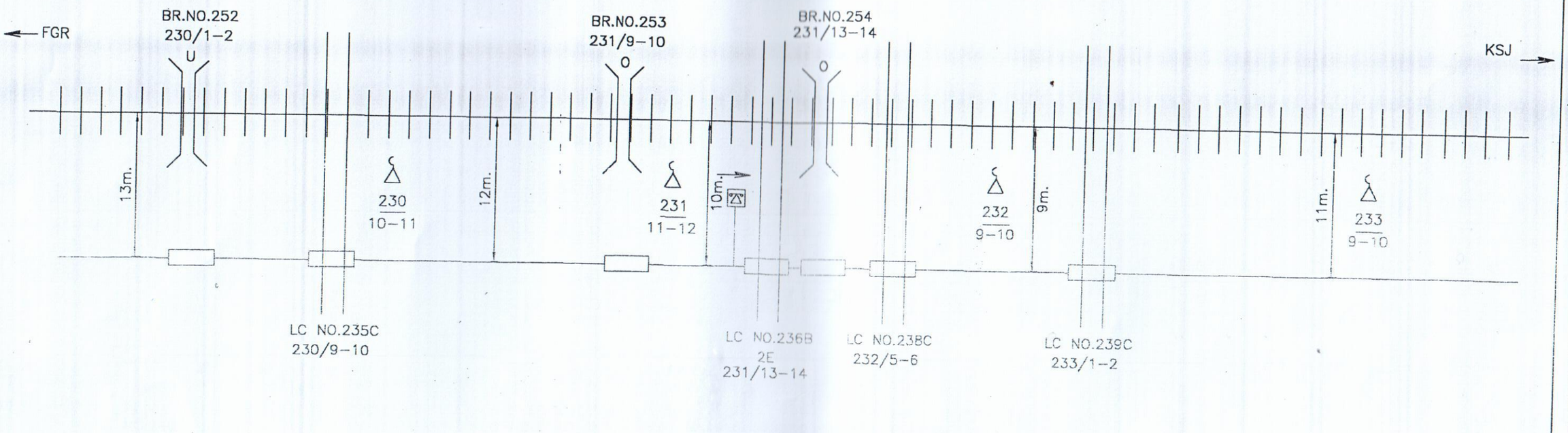

LEGEND --

1–GI / RCC PIPE----

2–L.C. GATE PHONE---

3–EMERGENCY SOCKET–

4–U – UNDER

5–O – OVER

Not to Scale

All reading in mts

Customer Name		N.E.RAILWAY			
Prepared By :		M/S ASHOK KUMAR SINGH, JAGARNATH PUR, GORAKHPUR			
SHEET NO.	19/23	CREATED BY	AK		Location :-- FARRUKHABAD-KASGANJ
CREATED ON		OFFERED BY	AK		
RIVISION NO.		APPR. BY	N.E.RLY		
MODIFIED ON		Ref.no.:- NE/2 DATE			

SE/TELE/CON/LJN DSTE/CON/LJN DY.CSTE/CON/LJN

CABLE ROUTE CHART N.E.RAILWAY FARRUKHABAD – KASGANJ SECTION
(6 QUAD CABLE)

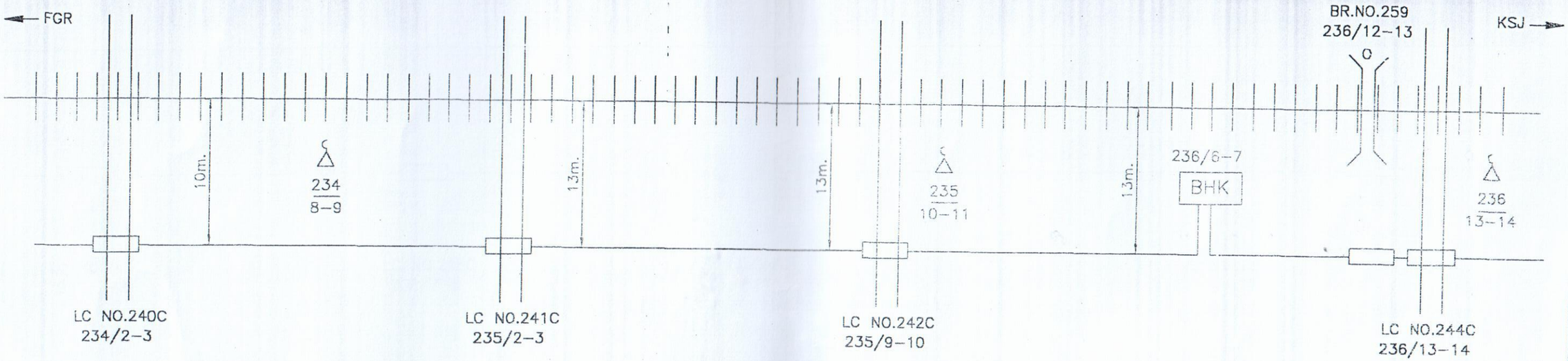

LEGEND --

1–GI / RCC PIPE----

2–L.C. GATE PHONE---

3–EMERGENCY SOCKET–

4–U – UNDER

5–O – OVER

Not to Scale

All reading in mts

Customer Name		N.E.RAILWAY			
Prepared By :		M/S ASHOK KUMAR SINGH, JAGARNATH PUR, GORAKHPUR			
SHEET NO.	20/23	CREATED BY	AK		Location :-- FARRUKHABAD-KASGANJ
CREATED ON		OFFERED BY	AK		
RIVISION NO.		APPR. BY	N.E.RLY		
MODIFIED ON		Ref.no.:– NE/2 DATE			

SE/TELE/CON/LJN DSTE/CON/LJN DY.CSTE/CON/LJN

CABLE ROUTE CHART N.E.RAILWAY FARRUKHABAD – KASGANJ SECTION
(6 QUAD CABLE)

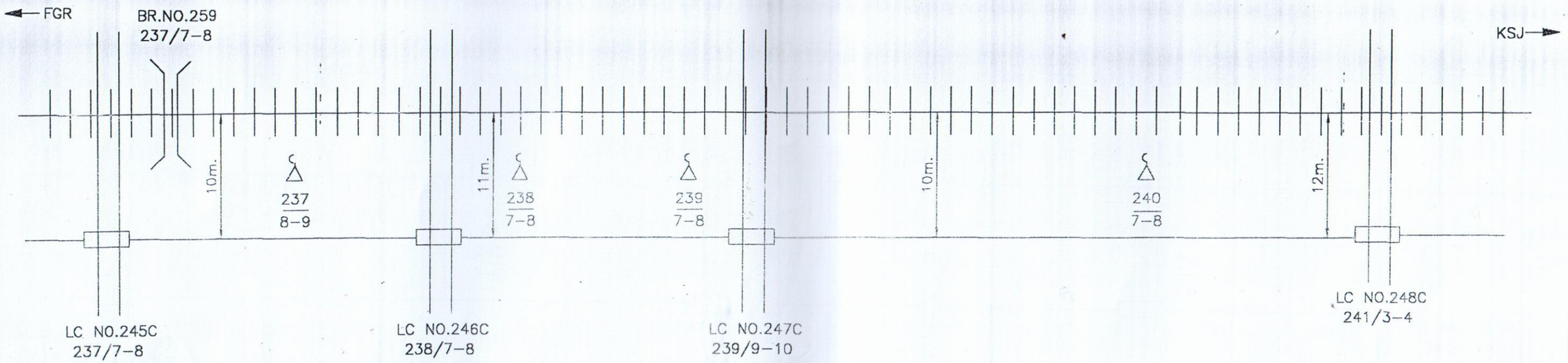

LEGEND --

1-GI / RCC PIPE----

2-L.C. GATE PHONE---

3-EMERGENCY SOCKET-

4-U – UNDER

5-O – OVER

Not to Scale

All reading in mts

SE/TELE/CON/LJN DSTE/CON/LJN DY.CSTE/CON/LJN

Customer Name		N.E.RAILWAY			
Prepared By :		M/S ASHOK KUMAR SINGH, JAGARNATH PUR, GORAKHPUR			
SHEET NO.	21/23	CREATED BY	AK		Location :--
CREATED ON		OFFERED BY	AK		FARRUKHABAD-KASGANJ
RIVISION NO.		APPR. BY	N.E.RLY		
MODIFIED ON		Ref.no.:- NE/2 DATE			

CABLE ROUTE CHART N.E.RAILWAY FARRUKHABAD – KASGANJ SECTION
(6 QUAD CABLE)

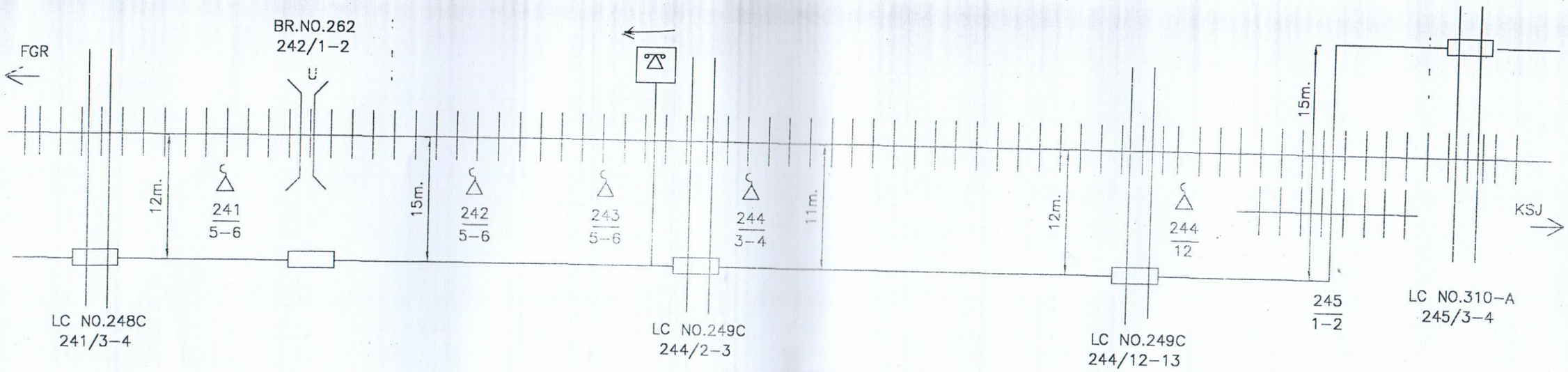

LEGEND --

1–GI / RCC PIPE----

2–L.C. GATE PHONE---

3–EMERGENCY SOCKET–

4–U – UNDER

5–O – OVER

Not to Scale

All reading in mts

Customer Name		N.E.RAILWAY			
Prepared By :		M/S ASHOK KUMAR SINGH, JAGARNATH PUR, GORAKHPUR			
SHEET NO.	22/23	CREATED BY	AK		Location :-- FARRUKHABAD-KASGANJ
CREATED ON		OFFERED BY	AK		
RIVISION NO.		APPR. BY	N.E.RLY		
MODIFIED ON		Ref.no.:- NE/2 DATE			

SE/TELE/CON/LJN DSTE/CON/LJN DY.CSTE/CON/LJN

CABLE ROUTE CHART N.E.RAILWAY FARRUKHABAD – KASGANJ SECTION
(6 QUAD CABLE)

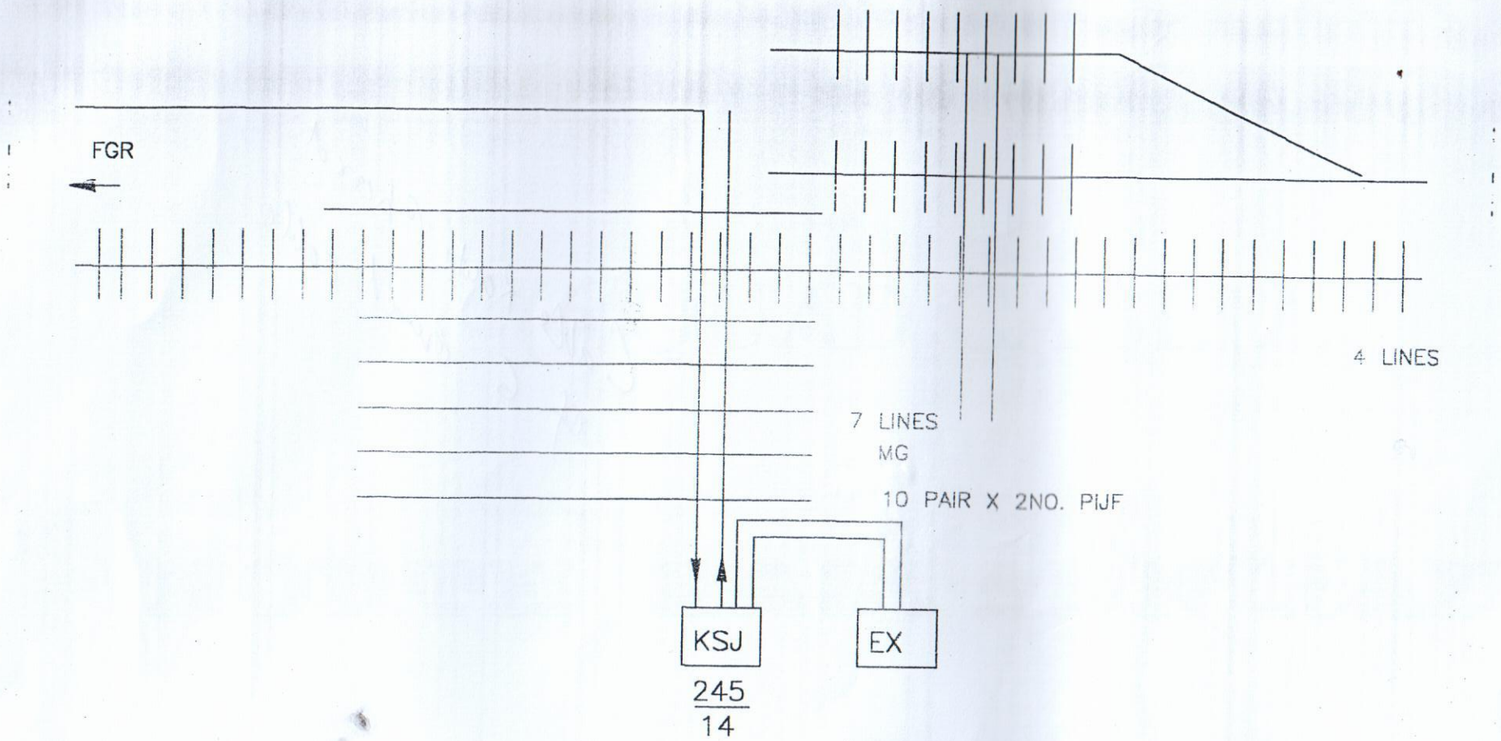

LEGEND --

1–GI / RCC PIPE----
2–L.C. GATE PHONE---
3–EMERGENCY SOCKET–
4–U – UNDER
5–O – OVER

Not to Scale
All reading in mts

Customer Name		N.E.RAILWAY			
Prepared By :		M/S ASHOK KUMAR SINGH, JAGARNATH PUR, GORAKHPUR			
SHEET NO.	23/23	CREATED BY	AK		Location :--
CREATED ON		OFFERED BY	AK		FARRUKHABAD-KASGANJ
RIVISION NO.		APPR. BY	N.E.RLY		
MODIFIED ON		Ref.no.:– NE/2 DATE			

SE/TELE/CON/LJN DSTE/CON/LJN DY.CSTE/CON/LJN